28/40/44/48-Pin, Low-Power, High-Performance Microcontroller with XLP Technology

PIC18F25/45/55Q43

Introduction

The PIC18-Q43 microcontroller family is available in 28/40/44/48-pin devices for real-time control applications. This family features a 12-bit Analog-to-Digital Converter with Computation (ADCC) automating Capacitive Voltage Divider (CVD) techniques for advanced capacitive touch sensing, averaging, filtering, oversampling and threshold comparison. This family showcases a new 16-bit Pulse-Width Modulator (PWM) module which provides dual independent outputs on the same time base. Additional features include vectored interrupt controller with fixed latency for handling interrupts, system bus arbiter, Direct Memory Access (DMA) capabilities, Universal Asynchronous Receiver-Transmitter (UART) with support for asynchronous, Digital Multiplex (DMX), Digital Addressable Lighting Interface (DALI) and Local Interconnect Network (LIN) protocols, Serial Peripheral Interface (SPI), I^2C, memory features like Memory Access Partition (MAP) to support users in data protection and bootloader applications, and Device Information Area (DIA), which stores factory calibration values to help improve temperature sensor accuracy.

PIC18-Q43 Family Types

Table 1. Devices Included in This Data Sheet

Device	Program Memory Flash (bytes)	Data SRAM (bytes)	Data EEPROM (bytes)	Memory Access Partition/ Device Information Area	I/O Pins/ Peripheral Pin Select	8-Bit Timer with HLT/ 16-Bit Timers	16-Bit Dual PWM/ CCP	Complementary Waveform Generator	Signal Measurement Timer	Numerically Controlled Oscillator	Configurable Logic Cell	12-Bit ADCC (channels)	8-Bit DAC	Comparator/ Zero-Cross Detect	High/Low-Voltage Detect	SPI/I^2C	UART/ UART with Protocol Support	Direct Memory Access (DMA)	Windowed Watchdog Timer	16-Bit CRC with Scanner	Vectored Interrupts	Peripheral Module Disable	Temperature Indicator
PIC18F25Q43	32K	2048	1024	Y/Y	25/Y	3/4	3/3	3	1	3	8	24	1	2/1	1	2/1	4/1	6	Y	Y	Y	Y	Y
PIC18F45Q43	32K	2048	1024	Y/Y	36/Y	3/4	3/3	3	1	3	8	35	1	2/1	1	2/1	4/1	6	Y	Y	Y	Y	Y
PIC18F55Q43	32K	2048	1024	Y/Y	44/Y	3/4	3/3	3	1	3	8	43	1	2/1	1	2/1	4/1	6	Y	Y	Y	Y	Y

© 2019-2024 Microchip Technology Inc. and its subsidiaries

Table 2. Devices not Included in This Data Sheet

Device	Program Memory Flash (bytes)	Data SRAM (bytes)	Data EEPROM (bytes)	Memory Access Partition/ Device Information Area	I/O Pins/ Peripheral Pin Select	8-Bit Timer with HLT/ 16-Bit Timers	16-Bit Dual PWM/ CCP	Complementary Waveform Generator	Signal Measurement Timer	Numerically Controlled Oscillator	Configurable Logic Cell	12-Bit ADCC (channels)	8-Bit DAC	Comparator/ Zero-Cross Detect	High/Low-Voltage Detect	SPI/I²C	UART/ UART with Protocol Support	Direct Memory Access (DMA)	Windowed Watchdog Timer	16-Bit CRC with Scanner	Vectored Interrupts	Peripheral Module Disable	Temperature Indicator
PIC18F26Q43	64K	4096	1024	Y/Y	25/Y	3/4	3/3	3	1	3	8	24	1	2/1	1	2/1	4/1	6	Y	Y	Y	Y	Y
PIC18F27Q43	128K	8192	1024	Y/Y	25/Y	3/4	3/3	3	1	3	8	24	1	2/1	1	2/1	4/1	6	Y	Y	Y	Y	Y
PIC18F46Q43	64K	4096	1024	Y/Y	36/Y	3/4	3/3	3	1	3	8	35	1	2/1	1	2/1	4/1	6	Y	Y	Y	Y	Y
PIC18F47Q43	128K	8192	1024	Y/Y	36/Y	3/4	3/3	3	1	3	8	35	1	2/1	1	2/1	4/1	6	Y	Y	Y	Y	Y
PIC18F56Q43	64K	4096	1024	Y/Y	44/Y	3/4	3/3	3	1	3	8	43	1	2/1	1	2/1	4/1	6	Y	Y	Y	Y	Y
PIC18F57Q43	128K	8192	1024	Y/Y	44/Y	3/4	3/3	3	1	3	8	43	1	2/1	1	2/1	4/1	6	Y	Y	Y	Y	Y

Features

- C Compiler Optimized RISC Architecture
- Operating Speed:
  - DC – 64 MHz clock input
  - 62.5 ns minimum instruction cycle
- Six Direct Memory Access (DMA) Controllers:
  - Data transfers to SFR/GPR spaces from either Program Flash Memory, Data EEPROM or SFR/GPR spaces
  - User programmable source and destination sizes
  - Hardware and software triggered data transfers
- Vectored Interrupt Capability:
  - Selectable high/low priority
  - Fixed interrupt latency of three instruction cycles
  - Programmable vector table base address
  - Backward compatible with previous interrupt capabilities
- 127-Level Deep Hardware Stack
- Low-Current Power-on Reset (POR)
- Configurable Power-up Timer (PWRT)
- Brown-out Reset (BOR)
- Low-Power BOR (LPBOR) Option
- Windowed Watchdog Timer (WWDT):
  - Watchdog Reset on too long or too short interval between watchdog clear events
  - Variable prescaler selection
  - Variable window size selection

Memory

- Up to 128 KB of Program Flash Memory
- Up to 8 KB of Data SRAM Memory
- 1024 Bytes Data EEPROM
- Memory Access Partition: The Program Flash Memory can be partitioned into:
  - Application Block

© 2019-2024 Microchip Technology Inc. and its subsidiaries

  - Boot Block
  - Storage Area Flash (SAF) Block
- Programmable Code Protection and Write Protection
- Device Information Area (DIA) Stores:
  - Temperature indicator factory calibrated data
  - Fixed Voltage Reference measurement data
  - Microchip unique identifier
- Device Characteristics Information (DCI) Area Stores:
  - Program/erase row sizes
  - Pin count details
  - EEPROM size
- Direct, Indirect and Relative Addressing modes

Operating Characteristics

- Operating Voltage Range:
  - 1.8V to 5.5V
- Temperature Range:
  - Industrial: -40°C to 85°C
  - Extended: -40°C to 125°C

Power-Saving Functionality

- Doze: CPU and Peripherals Running at Different Cycle Rates (typically CPU is lower)
- Idle: CPU Halted While Peripherals Operate
- Sleep: Lowest Power Consumption
- Peripheral Module Disable (PMD):
  - Ability to selectively disable hardware module to minimize active power consumption of unused peripherals
- Low-Power Mode Features:
  - Sleep: < 800 nA typical @ 1.8V
  - Operating Current:
    - 48 µA @ 32 kHz, 3V, typical

Digital Peripherals

- Three 16-Bit Pulse-Width Modulators (PWM):
  - Dual outputs for each PWM module
  - Integrated 16-bit timer/counter
  - Double-buffered user registers for duty cycles
  - Right/Left/Center/Variable aligned modes of operation
  - Multiple clock and Reset signal selections
- Four 16-Bit Timers (TMR0/1/3/5)
- Three 8-Bit Timers (TMR2/4/6) with Hardware Limit Timer (HLT)
- Eight Configurable Logic Cell (CLC):
  - Integrated combinational and sequential logic
- Three Complementary Waveform Generators (CWG):

© 2019-2024 Microchip Technology Inc. and its subsidiaries

  - Rising and falling edge dead-band control
  - Full-bridge, half-bridge, one-channel drive
  - Multiple signal sources
  - Programmable dead band
  - Fault-shutdown input
- Three Capture/Compare/PWM (CCP) modules:
  - 16-bit resolution for Capture/Compare modes
  - 10-bit resolution for PWM mode
- Three Numerically Controlled Oscillators (NCO):
  - Generates true linear frequency control and increased frequency resolution
  - Input clock up to 64 MHz
- Signal Measurement Timer (SMT):
  - 24-bit timer/counter with prescaler
  - Several modes of operation like Time-of-Flight, Period and Duty Cycle measurement etc.
- Data Signal Modulator (DSM):
  - Multiplex two carrier clocks, with glitch prevention feature
  - Multiple sources for each carrier
- Programmable CRC with Memory Scan:
  - Reliable data/program memory monitoring for Fail-Safe operation (e.g., Class B)
  - Calculate 16-bit CRC over any portion of Program Flash Memory
- Five UART modules:
  - One module (UART1) supports LIN host and client, DMX mode, DALI gear and device protocols
  - Asynchronous UART, RS-232, RS-485 compatible
  - Automatic and user timed BREAK period generation
  - Automatic checksums
  - Programmable 1, 1.5, and 2 Stop bits
  - Wake-up on BREAK reception
  - DMA compatible
- Two SPI modules:
  - Configurable length bytes
  - Arbitrary length data packets
  - Transmit-without-receive and receive-without-transmit option
  - Transfer byte counter
  - Separate transmit and receive buffers with 2-byte FIFO and DMA capabilities
- One I^2C module, SMBus, PMBus™ Compatible:
  - Supports Standard-mode (100 kHz), Fast-mode (400 kHz) and Fast-mode plus (1 MHz) modes of operation
  - 7-bit and 10-bit addressing modes with address masking modes
  - Dedicated address, transmit and receive buffers and DMA capabilities
  - Bus collision detection with arbitration
  - Bus time-out detection and handling
  - I^2C, SMBus 2.0 and SMBus 3.0, and 1.8V input level selections

© 2019-2024 Microchip Technology Inc. and its subsidiaries

  - Separate Transmit and Receive Buffers with 2-byte FIFO and DMA capabilities
  - Multi-Host mode, including self-addressing
- Device I/O Port Features:
  - 25 I/O pins (PIC18F25/26/27Q43)
  - 36 I/O pins (PIC18F45/46/47Q43)
  - 44 I/O pins (PIC18F55/56/57Q43)
  - Individually programmable I/O direction, open-drain, slew rate and weak pull-up control
  - Interrupt-on-change on most pins
  - Three programmable external interrupt pins
- Peripheral Pin Select (PPS):
  - Enables pin mapping of digital I/O

Analog Peripherals

- Analog-to-Digital Converter with Computation (ADCC):
  - Up to 140 ksps
  - Up to 43 external channels
  - Automated math functions on input signals:
    - Averaging, filter calculations, oversampling and threshold comparison
  - Operates in Sleep
  - Five internal analog channels
  - Hardware Capacitive Voltage Divider (CVD) Support:
    - Adjustable sample-and-hold capacitor array
    - Guard ring digital output drive
    - Automates touch sampling and reduces software size and CPU usage when touch or proximity sensing is required
- 8-Bit Digital-to-Analog Converter (DAC):
  - Buffered output available on two I/O pins
  - Internal connections to Analog-to-Digital (ADC) and Comparators
- Two Comparators (CMP):
  - Four external inputs
  - Configurable output polarity
  - External output via Peripheral Pin Select
- Zero-Cross Detect (ZCD):
  - Detect when AC signal on pin crosses ground
- Voltage Reference:
  - Fixed Voltage Reference with 1.024V, 2.048V and 4.096V output levels
  - Internal connections to ADC, Comparator and DAC

Clocking Structure

- High-Precision Internal Oscillator Block (HFINTOSC):
  - Selectable frequencies up to 64 MHz
  - ±1% at calibration
  - Active Clock Tuning of HFINTOSC for better accuracy

© 2019-2024 Microchip Technology Inc. and its subsidiaries

- 31 kHz Low-Power Internal Oscillator (LFINTOSC)
- External 32 kHz Crystal Oscillator (SOSC)
- External High-Frequency Oscillator Block:
  - Three crystal/resonator modes
  - Digital Clock Input mode
  - 4x PLL with external sources
- Fail-Safe Clock Monitor:
  - Allows for operational recovery if external clock stops
- Oscillator Start-up Timer (OST):
  - Ensures stability of crystal oscillator sources

Programming/Debug Features

- In-Circuit Serial Programming™ (ICSP™) via Two Pins
- In-Circuit Debug (ICD) with Three Breakpoints via Two Pins
- Debug Integrated On-Chip

© 2019-2024 Microchip Technology Inc. and its subsidiaries

Q43 Block Diagram

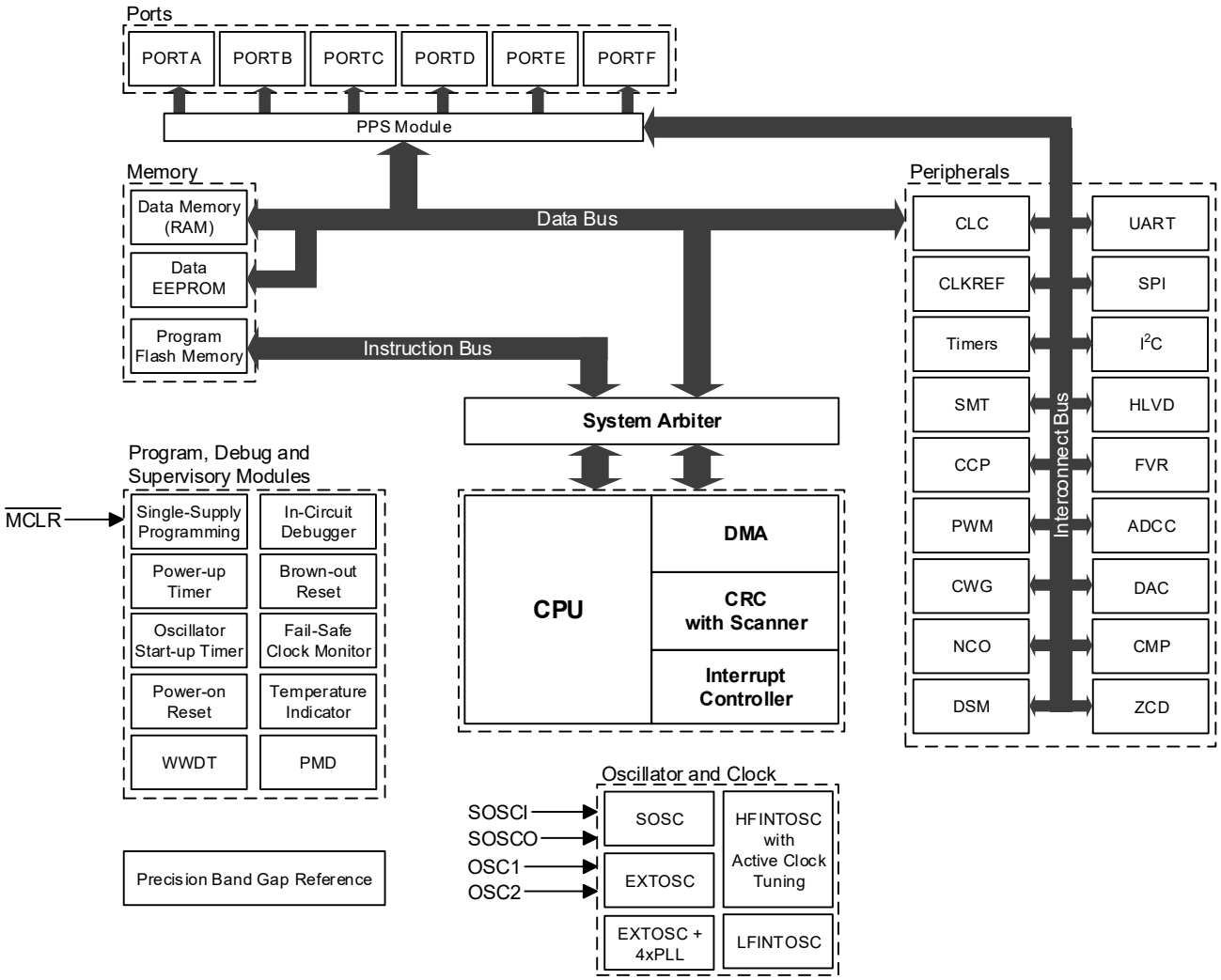

© 2019-2024 Microchip Technology Inc. and its subsidiaries