14/20-Pin, Low-Power, High-Performance Microcontroller with XLP Technology

PIC18F04/05/14/15Q40

www.microchip.com
Product Page Links

Introduction

The PIC18-Q40 microcontroller family is available in 14/20-pin devices for real-time control applications. This family features a 12-bit ADC with Computation (ADCC) automating Capacitive Voltage Divider (CVD) techniques for advanced capacitive touch sensing, averaging, filtering, oversampling and threshold comparison and two 8-bit DAC modules. The family showcases a 16-bit Pulse-Width Modulator (PWM) module which provides dual independent outputs on the same time base. Additional features include vectored interrupt controller with fixed latency for handling interrupts, system bus arbiter, Direct Memory Access (DMA) capabilities, UART with support for asynchronous, DMX, Digital Addressable Lighting Interface (DALI) and Local Interconnect Network (LIN) protocols, Serial Peripheral Interface (SPI), I^2C and a programmable 32-bit Cyclic Redundancy Check (CRC) with memory scan. This family also includes memory features such as Memory Access Partition (MAP) to support users in data protection and bootloader applications and Device Information Area (DIA), which stores factory calibration values to help improve temperature sensor accuracy.

PIC18-Q40 Family Types

Table 1. Devices included in this data sheet

Device	Program Memory Flash (bytes)	Data SRAM (bytes)	Data EEPROM (bytes)	Memory Access Partition/ **Device Information Area**	I/O Pins/ **Peripheral Pin Select**	8-Bit Timer with HLT/ **16-Bit Timers**	16-Bit Dual PWM/ **CCP**	Complimentary Waveform **Generator**	Signal Measurement Timer	Numerically Controlled **Oscillator**	Configurable Logic Cell	12-Bit ADCC (channels)	8-Bit DAC	Comparator/ **Zero-Cross Detect**	High-Low Voltage Detect	SPI / I^2C	UART/ **UART with Protocol Support**	Direct Memory Access (DMA)	Windowed Watchdog Timer	32-Bit CRC with Scanner	Vectored Interrupts	**Peripheral Module Disable**	**Temperature Indicator**
PIC18F04Q40	16k	1024	512	Y/Y	12/Y	2/3	3/1	1	1	1	4	11	2	2/1	1	2/1	2/1	4	Y	Y	Y	Y	Y
PIC18F05Q40	32k	2048	512	Y/Y	12/Y	2/3	3/1	1	1	1	4	11	2	2/1	1	2/1	2/1	4	Y	Y	Y	Y	Y
PIC18F14Q40	16k	1024	512	Y/Y	18/Y	2/3	3/1	1	1	1	4	17	2	2/1	1	2/1	2/1	4	Y	Y	Y	Y	Y
PIC18F15Q40	32k	2048	512	Y/Y	18/Y	2/3	3/1	1	1	1	4	17	2	2/1	1	2/1	2/1	4	Y	Y	Y	Y	Y

© 2020-2025 Microchip Technology Inc. and its subsidiaries

Table 2. Devices not included in this data sheet

Device	Program Memory Flash (bytes)	Data SRAM (bytes)	Data EEPROM (bytes)	Memory Access Partition/ Device Information Area	I/O Pins/ Peripheral Pin Select	8-Bit Timer with HLT/ 16-Bit Timers	16-Bit Dual PWM/ CCP	Complimentary Waveform Generator	Signal Measurement Timer	Numerically Controlled Oscillator	Configurable Logic Cell	12-Bit ADC² (channels)	8-Bit DAC	Comparator/ Zero-Cross Detect	High-Low Voltage Detect	SPI / I²C	UART/ UART with Protocol Support	Direct Memory Access (DMA)	Windowed Watchdog Timer	32-Bit CRC with Scanner	Vectored Interrupts	Peripheral Module Disable	Temperature Indicator
PIC18F06Q40	64k	4096	512	Y/Y	12/Y	2/3	3/1	1	1	1	4	11	2	2/1	1	2/1	2/1	4	Y	Y	Y	Y	Y
PIC18F16Q40	64k	4096	512	Y/Y	18/Y	2/3	3/1	1	1	1	4	17	2	2/1	1	2/1	2/1	4	Y	Y	Y	Y	Y

Features

- C Compiler Optimized RISC Architecture
- Operating Speed:
  - DC – 64 MHz clock input
  - 62.5 ns minimum instruction cycle
- Four Direct Memory Access (DMA) Controllers:
  - Data transfers to SFR/GPR spaces from either Program Flash Memory, Data EEPROM or SFR/GPR spaces
  - User programmable source and destination sizes
  - Hardware and software triggered data transfers
- Vectored Interrupt Capability:
  - Selectable high/low priority
  - Fixed interrupt latency of three instruction cycles
  - Programmable vector table base address
  - Backwards compatible with previous interrupt capabilities
- 128-Level Deep Hardware Stack
- Low-Current Power-on Reset (POR)
- Configurable Power-up Timer (PWRT)
- Brown-out Reset (BOR)
- Low-Power BOR (LPBOR) Option
- Windowed Watchdog Timer (WWDT):
  - Watchdog Reset on too long or too short interval between watchdog clear events
  - Variable prescaler selection
  - Variable window size selection

Memory

- Up to 64 KB of Program Flash Memory
- Up to 4 KB of Data SRAM Memory
- 512 Bytes Data EEPROM
- Memory Access Partition: The Program Flash Memory can be partitioned into:
  - Application Block
  - Boot Block
  - Storage Area Flash (SAF) Block

© 2020-2025 Microchip Technology Inc. and its subsidiaries

- Programmable Code Protection and Write Protection
- Device Information Area (DIA) Stores:
  - Temperature indicator factory calibrated data
  - Fixed Voltage Reference measurement data
  - Microchip unique identifier
- Device Characteristics Information (DCI) Area Stores:
  - Program/erase row sizes
  - Pin count details
  - EEPROM size
- Direct, Indirect and Relative Addressing modes

Operating Characteristics

- Operating Voltage Range:
  - 1.8V to 5.5V
- Temperature Range:
  - Industrial: -40°C to 85°C
  - Extended: -40°C to 125°C

Power-Saving Functionality

- Doze: CPU and Peripherals Running at Different Cycle Rates (typically CPU is lower)
- Idle: CPU Halted While Peripherals Operate
- Sleep: Lowest Power Consumption
- Peripheral Module Disable (PMD):
  - Ability to selectively disable hardware module to minimize active power consumption of unused peripherals
- Low-Power Mode Features:
  - Sleep: < 1 µA typical @ 3V
  - Operating Current:
    - 48 µA @ 32 kHz, 3V, typical

Digital Peripherals

- Three 16-Bit Pulse-Width Modulators (PWM):
  - Dual outputs for each PWM module
  - Integrated 16-bit timer/counter
  - Double-buffered user registers for duty cycles
  - Right/Left/Center/Variable-Aligned modes of operation
  - Multiple clock and Reset signal selections
- Three 16-Bit Timers (TMR0/1/3)
- Two 8-Bit Timers (TMR2/4) with Hardware Limit Timer (HLT)
- Four Configurable Logic Cell (CLC):
  - Integrated combinational and sequential logic
- One Complimentary Waveform Generator (CWG):
  - Rising and falling edge dead-band control
  - Full-bridge, half-bridge, 1-channel drive

© 2020-2025 Microchip Technology Inc. and its subsidiaries

  - Multiple signal sources
  - Programmable dead band
  - Fault-shutdown input
- One Capture/Compare/PWM (CCP) module:
  - 16-bit resolution for Capture/Compare modes
  - 10-bit resolution for PWM mode
- One Numerically Controlled Oscillator (NCO):
  - Generates true linear frequency control and increased frequency resolution
  - Input clock up to 64 MHz
- Signal Measurement Timer (SMT):
  - 24-bit timer/counter with prescaler
  - Several modes of operation like Time-of-Flight, Period and Duty Cycle measurement, etc.
- Data Signal Modulator (DSM):
  - Multiplex two carrier clocks, with glitch prevention feature
  - Multiple sources for each carrier
- Programmable CRC with Memory Scan:
  - Reliable data/program memory monitoring for Fail-Safe operation (e.g., Class B)
  - Calculate 32-bit CRC over any portion of Program Flash Memory
- Three UART modules:
  - One module (UART1) supports LIN host and client, DMX mode, DALI gear and device protocols
  - Asynchronous UART, RS-232, RS-485 compatible
  - Automatic and user timed BREAK period generation
  - Automatic checksums
  - Programmable 1, 1.5, and two Stop bits
  - Wake-up on BREAK reception
  - DMA compatible
- Two SPI modules:
  - Configurable length bytes
  - Arbitrary length data packets
  - Transmit-without-receive and receive-without-transmit option
  - Transfer byte counter
  - Separate transmit and receive buffers with 2-byte FIFO and DMA capabilities
- One I^2C module, SMBus, PMBus™ Compatible:
  - Supports Standard-mode (100 kHz), Fast-mode (400 kHz) and Fast-mode plus (1 MHz) modes of operation
  - 7-bit and 10-bit addressing modes with address masking modes
  - Dedicated address, transmit and receive buffers and DMA capabilities
  - Bus collision detection with arbitration
  - Bus time-out detection and handling
  - I^2C, SMBus 2.0 and SMBus 3.0, and 1.8V input level selections
  - Separate Transmit and Receive Buffers with 2-byte FIFO and DMA capabilities
  - Multi-Master mode, including self-addressing

© 2020-2025 Microchip Technology Inc. and its subsidiaries

- Device I/O Port Features:
  - 12 I/O pins (PIC18F04/05/06Q40)
  - 18 I/O pins (PIC18F14/15/16Q40)
  - Individually programmable I/O direction, open-drain, slew rate and weak pull-up control
  - Interrupt-on-change on most pins
  - Three programmable external interrupt pins
- Peripheral Pin Select (PPS):
  - Enables pin mapping of digital I/O

Analog Peripherals

- Analog-to-Digital Converter with Computation (ADCC):
  - Up to 17 external channels
  - Up to 140 KSPS
  - Automated math functions on input signals:
    - Averaging, filter calculations, oversampling and threshold comparison
  - Operates in Sleep
  - Four internal analog channels
  - Hardware Capacitive Voltage Divider (CVD) Support:
    - Adjustable sample and hold capacitor array
    - Guard ring digital output drive
    - Automates touch sampling and reduces software size and CPU usage when touch or proximity sensing is required
- Two 8-Bit Digital-to-Analog Converters (DAC):
  - Buffered output available on two I/O pins
  - Internal connections to ADC and Comparators
- Two Comparators (CMP):
  - Four external inputs
  - Configurable output polarity
  - External output via Peripheral Pin Select
- Zero-Cross Detect (ZCD):
  - Detect when AC signal on pin crosses ground
- Voltage Reference:
  - Fixed Voltage Reference with 1.024V, 2.048V and 4.096V output levels
  - Internal connections to ADC, Comparator and DAC

Clocking Structure

- High-Precision Internal Oscillator Block (HFINTOSC):
  - Selectable frequencies up to 64 MHz
  - ±1% at calibration
  - Active Clock Tuning of HFINTOSC for better accuracy
- 32 kHz Low-Power Internal Oscillator (LFINTOSC)
- External 32 kHz Crystal Oscillator (SOSC)
- External High-Frequency Oscillator Block:

© 2020-2025 Microchip Technology Inc. and its subsidiaries

  - Three crystal/resonator modes
  - Digital Clock Input mode
  - 4x PLL with external sources
- Fail-Safe Clock Monitor:
  - Allows for operational recovery if external clock stops
- Oscillator Start-up Timer (OST):
  - Ensures stability of crystal oscillator sources

Programming/Debug Features

- In-Circuit Serial Programming™ (ICSP™) via Two Pins
- In-Circuit Debug (ICD) with Three Breakpoints via Two Pins
- Debug Integrated On-Chip

PIC18-Q40 Block Diagram

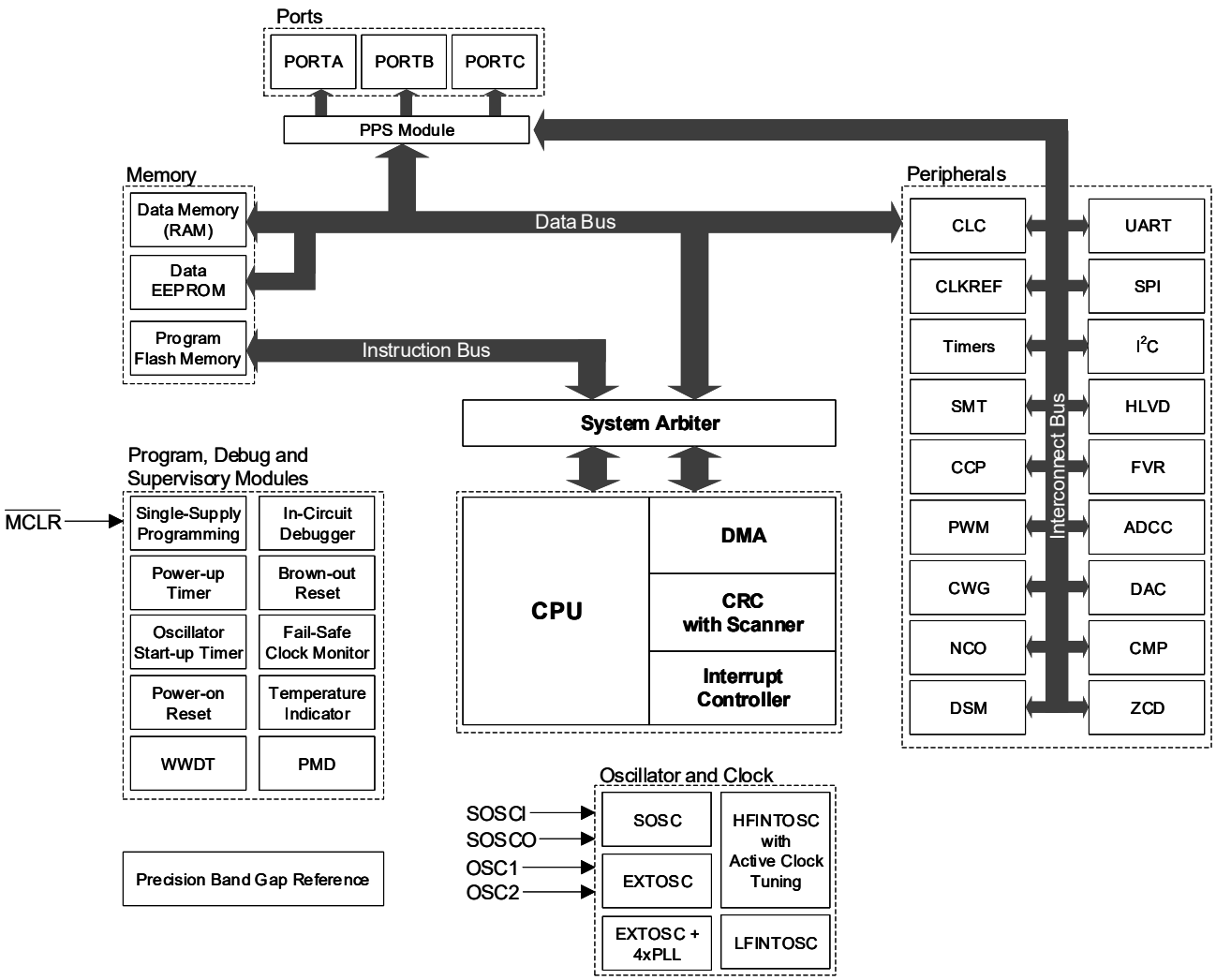

© 2020-2025 Microchip Technology Inc. and its subsidiaries